DENTSPLY
TRUBYTE

TRIAD® 2000
Light Curing System
OPERATING/SERVICE MANUAL

For Assistance, Call DENTSPLY Trubyte
570 West College Avenue
York, PA 17405
1-800-877-0020

Technical: Ext. 4212 Clinical: Ext. 4597
Warranty/Repair Assistance: Ext. 4319 or 4581

CE

TABLE OF CONTENTS

Important Information 2

Triad 2000 Unit General Description & Specifications 3

Installation 4

Operating Procedures 5

Maintenance 6

Troubleshooting 8

Triad 2000 Parts Listing 9

Triad 2000 Power Schematic 10

Triad 2000 Unit Warranty 11

Appendix I: Triad II Operation 12

Triad Applications/Material Processing Times 14

IMPORTANT INFORMATION

TRIAD UNIT:

Do not cover the Triad 2000 turntable. The Triad 2000 VLC Light Curing Unit is intended for the curing of:

1) Triad Material,
2) Triad Material to already-cured Triad Material, or
3) Triad Material to previously fabricated acrylic prostheses.

Because heat is generated as part of the cure process, some thermoplastic materials may soften and distort. Care should be exercised in dealing with combinations of metal and plastic, relines of lower partial dentures and thermoplastic denture base materials. Distortion can be avoided by dividing the total cure time into interrupted segments to allow cooling.

DENTSPLY recommends routine sterilization of the turntable. Remove the turntable from the unit, then soak or spray it with a surface disinfectant. The Triad 2000 turntable may be autoclaved up to approximately 100 cycles, based on internal testing.

Do not operate the unit with the turntable down.

NOTICE: DENTSPLY CANNOT BE RESPONSIBLE FOR THE PERFORMANCE OF TRIAD MATERIALS EXCEPT WHEN USED WITH TRIAD CURING UNITS, AND IN ACCORDANCE WITH PROCEDURES RECOMMENDED BY DENTSPLY.

Triad 2000 Light Curing Unit:
U.S. Patent No. 5,298,758; 5,477,054
U.S. Patent No. Des. 377,583

TRIAD MATERIALS:

- If uncured Triad VLC Material becomes crusty, forms a skin on its surface and becomes difficult to blend together, it has been exposed to light for too long and should be discarded because irreversible partial curing has occurred.
- If fresh, room-temperature Triad Material should craze or crack when bent at a sharp angle, it has exceeded its useful life.
- Refrigerate Triad Materials for maximum shelf life.
- Prolonged contact with uncured Triad Materials can cause a slight-to-moderate skin irritation. Wash hands after handling resin. Persons with special skin problems, cuts, or abrasions should wear protective gloves. Uncured Triad Materials are mild sensitizing agents. Occasionally, users may develop contact dermatitis. Should this occur, wear protective gloves. If sensitization persists, consult a physician.
- Triad Bonding Agent is a moderate skin irritant. Apply with brush provided. Avoid contact with skin. Should contact occur, wash promptly. Contains methyl methacrylate, a potential sensitizing agent for certain individuals.
- DENTSPLY recommends exercising good infection control practices when using Triad Bonding Agent and Air Barrier Coating (ABC). To avoid contamination of contents, pour a small amount of Bonding Agent or ABC into a dappen dish. After using the brush to apply solution, remove brush from cap and discard. Use general purpose disposable brushes thereafter.
- Triad Air Barrier Coating should be kept out of the eyes.
- DENTSPLY recommends exercising good infection control practices when using Triad Model Release Agent (MRA). Use a clean cotton swab or disposable spatula to remove the desired amount from the MRA container. Dispose of any unused portion of MRA when finished with application.

TRIAD® 2000 LIGHT CURING UNIT GENERAL DESCRIPTION & SPECIFICATIONS

The DENTSPLY Triad 2000 Light Curing Unit is a precision engineered unit, constructed to exacting specifications with the finest materials and workmanship. It contains controls and components for curing Triad visible light activated materials. The unit is manufactured and distributed by DENTSPLY International Inc., York, PA, through authorized dental dealers throughout the world.

The DENTSPLY Triad 2000 Unit incorporates specific controls with a rotating platform and lift, and through a tungsten halogen light source, cures light-activated materials by use of visible light. The adjustable table features selective controls to accommodate the processing of all types of visible light cure materials in various appliance shapes, with or without the use of a model (cast).

Refer to Figure 1 for location of the following unit controls and components:

POWER: On/Off switch. The cooling fan will operate.

TABLE: Activates rotation of the table.

CURE: On/Off switch. Activates the lamp when access door is closed. (Access door actuates safety interlock switch.)

TIMER: Rotating timer dial programs processing time.

TURNTABLE:
The turntable is raised and lowered by the top-mounted lift knob. The turntable will raise or lower to internal stops. The rotation of the turntable is provided by a gear-motor operating at 6 rpm. Rotation is activated by the table switch.

CURING CHAMBER:
Contains a high-power, specially angled tungsten halogen reflector lamp which projects optimum photocure light on the turntable location. The lamp is mounted to be replaced easily.

COOLING FAN:
One 12 watt, 115V fan operates when the power switch is ON, cooling the lamp housing and the curing chamber.

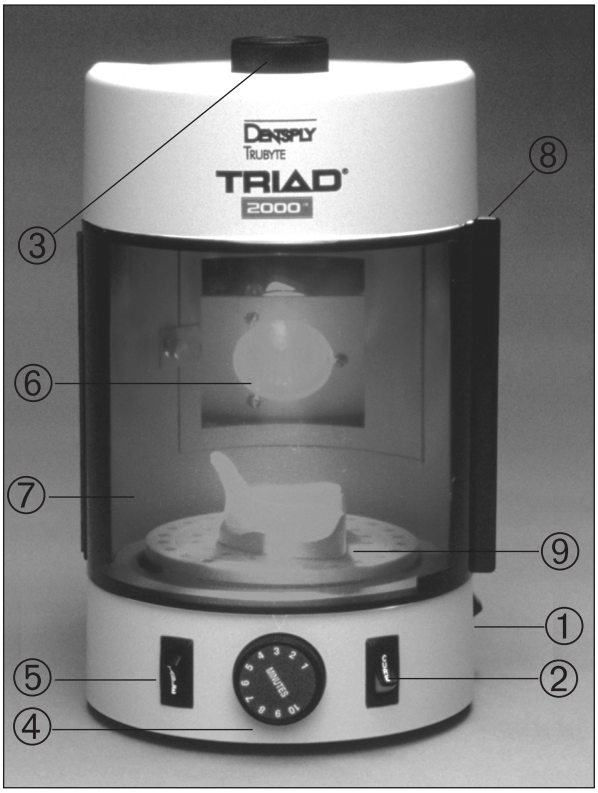

FIGURE 1

1. POWER Switch
2. CURE Switch
3. Lift Knob
4. TIMER Dial
5. Table Switch
6. Lamp and Mounting Assembly
7. Curing Chamber Door
8. Safety Interlock Actuator
9. Curing Chamber

UNIT SPECIFICATIONS

DIMENSIONS

Height:	12-1/8 in. (30.8 cm)
Width:	7 in. (17.8 cm)
Depth:	10-3/4 in. (27.3 cm)
Power Cord:	62 in. (157.5 cm)

WEIGHT

Domestic:	10 lbs.
Export:	15.5 lbs.

VOLTAGE/CURRENT	100V/2.7 AMP 115V/2.3 AMP 220-240V/1.2 AMP
FREQUENCY	50/60 Hz
LAMP	Special Tungsten Halogen (See Parts Listing section)

TRIAD® 2000 LIGHT CURING UNIT INSTALLATION

UNPACKING AND INSTALLATION

➡ DO NOT CONNECT POWER CORD TO OUTLET AT THIS TIME.

1. Remove unit from shipping carton and place in the desired operating location.

2. Open the processing chamber door and remove packing material.

> **NOTE**: Save shipping and packing materials. If service is required at any time on your Triad 2000 unit, you are responsible for its safe* shipment back to DENTSPLY. This is best accomplished if the original shipping carton and packing materials are used.

3. Connect the POWER cord to an appropriate power source.

4. Turn the POWER switch ON. The cooling fan should operate.

5. With the access door closed, set the TIMER dial to 1 minute. Depress the CURE switch to ON. The lamp should illuminate.

6. Depress the TABLE switch to ON. The table should rotate.

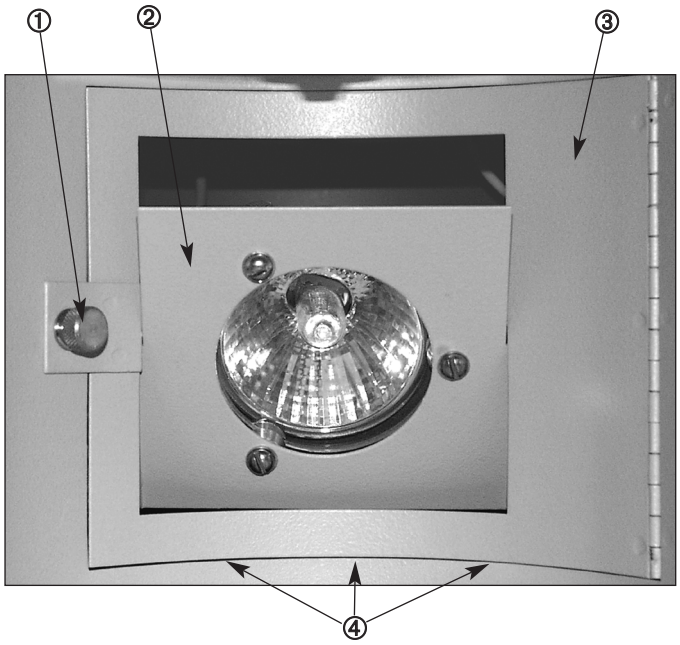

FIGURE 2

1. Lamp Access Door Thumbscrew
2. Lamp Mounting
3. Lamp Access Door
4. Optimum Curing “Sightline”

***Supply OSHA information re: Bloodborne pathogens policy on shipping possible contaminated equipment for service.**

TRIAD® 2000 LIGHT CURING UNIT OPERATING PROCEDURES

USING THE 'SIGHTLINE'

To ensure optimum curing of all Triad Materials, it is important to position the Triad appliance at the proper height within the curing chamber. In the Triad 2000 unit, the alignment sightline is the lowest edge of the lamp access door. (Refer to Figures 2 and 3.)

Positioning of turntable should be approximately one-quarter inch below this sightline (created by the bottom edge of the lamp access door). Simply use the lift knob to raise or lower the appliance to be cured to within this range. The mid-point of the appliance should be lined up with the sightline for optimum curing.

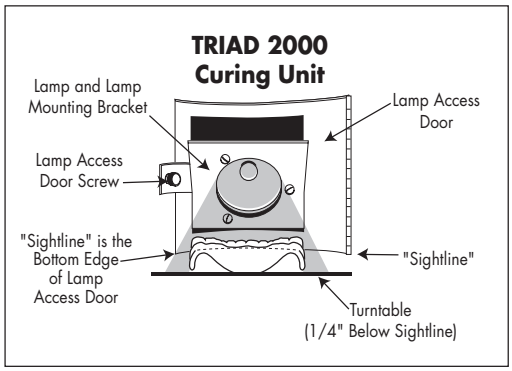

FIGURE 3

PROCESSING PROCEDURES

1. Place workpiece to be processed in the center of the turntable.
2. Set height of turntable using the lift knob (on top) and the optimum cure "sightline" shown in Figures 2 and 3 for maximum light cure.
3. Firmly close the chamber access door.

> **NOTE:** Open and close the curing chamber door using the top one-half to one-third of the finger grip edge on the right-hand side of the door. Failure to close the door properly will not engage the interlock switch at the top of the door, thus preventing the lamp from operating.

4. Press the POWER switch to ON.
5. Rotate TIMER to desired processing time interval. (See the "Recommended Material Processing Times" section.)
6. Press the CURE and TABLE switches to activate lamp and turntable rotation. The lamp will turn off automatically when the processing cycle is complete.

> **NOTE:** Should a processing time cycle be interrupted, recycle the CURE switch to OFF. Continue processing the workpiece by pressing the CURE switch to ON, which will result in a new, full-term cycle as indicated by the TIMER.

7. Open the chamber access door and remove the workpiece from the processing chamber.
8. When the fan has cooled the processing chamber (approximately 5 minutes), press the POWER switch to OFF.

IMPORTANT:

Within practical working times, complete processing of Triad Materials is not possible using hand-held light curing devices developed for clinical restorative dentistry. Therefore, with procedures that call for the use of a hand-held light to establish an initial set, the work must then be processed for the minimum recommended time in a Triad VLC Light Curing Unit. Only this will assure maximum physical properties of the Triad Material used.

> **WARNING:**
> A protective lens covering the lamp becomes hot during processing. Avoid contact at any time to prevent burns.

CAUTION:

DO NOT block or otherwise defeat the access door interlock switch.

DO NOT place any items or material on top of the unit.

DO NOT obstruct air flow of the cooling fan in any way.

DO NOT cover Triad 2000 turntable.

DO NOT immerse unit in water.

TRIAD® 2000 LIGHT CURING UNIT MAINTENANCE

Maintenance instructions within this section are limited to Periodic Maintenance and Troubleshooting/Analysis.

The corrective measures presented in the troubleshooting procedures will eliminate most difficulties encountered. When more than one corrective measure is given, follow the indicated sequence. **If corrective measures fail to eliminate the malfunction, contact your dealer service representative for repair, or DENTSPLY Lab Products Service Department at 1-800-877-0020, ext. 4319 or 4581.**

CAUTION:

Be certain to disconnect the electrical power source to the unit prior to performing maintenance.

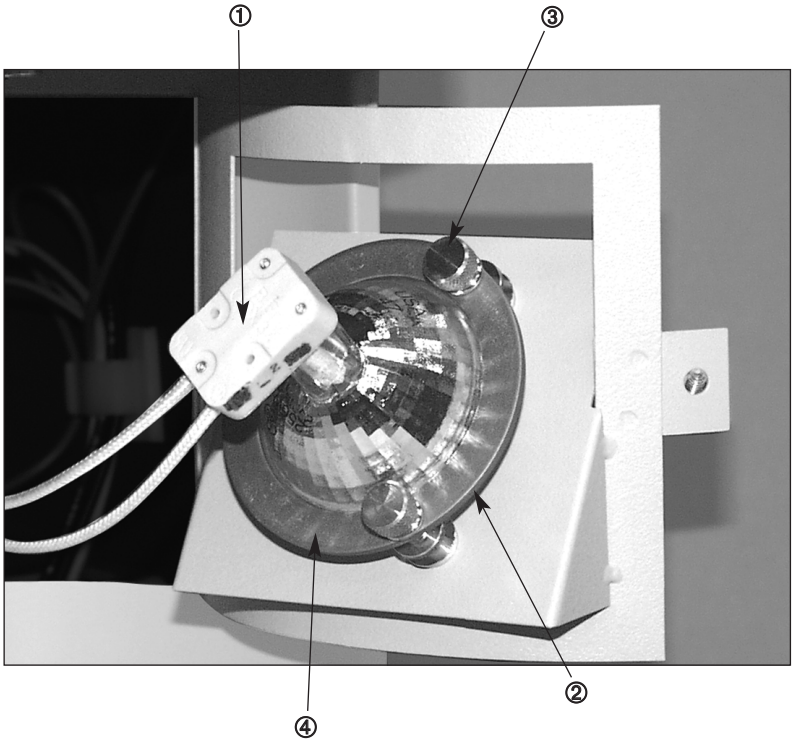

1. Lamp Socket
2. Protective Lens
3. Knurled Thumbscrew
4. Lamp Collar

FIGURE 4

COMPONENT REMOVAL AND REPLACEMENT OF LAMP

1. When the lamp burns out, unplug the cord from the power supply outlet.
2. Open the Lamp Access Door to expose the lamp connector wires which are attached to the back of the lamp housing.

CAUTION:

The lamp operates under pressure and at a high temperature and may shatter or fail especially if the unit is jarred or dropped when the lamp is on.

This curing lamp is unique to the Triad 2000 unit. Use only the lamp specified for this unit **(Reorder No. 70353)**. Use of improper lamp or use of defective equipment can result in shattering which can cause personal injury and/or equipment damage.

The lamp may be HOT from being in use. Allow the lamp to cool to room temperature, approximately 10 minutes, before proceeding with replacement.

3. Carefully remove lamp socket from the rear of the lamp. See Figure 4.
4. Unscrew the three knurled screws and remove the lamp collar (ring) and the lamp.
5. The replacement lamp and other parts should be re-assembled in the reverse order of disassembly.
6. Return Lamp Access Door to its original position and tighten the thumbscrew.
7. The circuit breaker on the side of the unit may have activated. Reset the circuit breaker by depressing it to the flush position.
8. Close the access door and actuate lamp illumination by depressing the CURE switch.
9. When the unit has been re-assembled and the access door closed, operate the unit through a test cure cycle to check whether the lamp is functioning properly.

NOTE: The lamp will not operate with the curing chamber access door in the open position.

MAINTENANCE

No unusual maintenance of the unit is required other than to keep the unit free of excessive dust and debris.

When indicated, use a vacuum or air pressure hose to gently remove dust or debris from the optical filter and turntable area.

The turntable will lift off from its motor mounting to facilitate cleaning. It may be soaked or sprayed with a surface disinfectant. Note also that the Triad 2000 turntable may be safely autoclaved up to 100 cycles.

Clean the cabinet with a mild soap or surface disinfectant as required. Avoid abrasive cleaning compounds.

PRECAUTIONS:

- Prevent liquids from entering the unit, particularly from the top.
- Disconnect the Power Cord prior to performing any maintenance.

TRIAD® 2000 TROUBLESHOOTING & ANALYSIS

SYMPTOM	PROBABLE CAUSE	CORRECTIVE ACTIONS*
Fan does not operate.	No power to unit.	Check wall outlet and, if faulty, make necessary correction.
	Circuit breaker is tripped.	Reset unit circuit breaker.
	POWER switch is faulty.	Check continuity of switch. Replace if faulty.
	Foreign object in fan chamber.	Check for object in chamber, remove.
Fan does not rotate.	Fan is defective.	Replace defective fan. (NOTE: Air movement should be 'out' of unit when fan operates.
Curing lamp does not operate.	Lamp is burned out.	Replace lamp.
	Curing chamber access door is ajar or access door interlock switch is not functioning.	1. Close access door completely. 2. Check interlock switch adjustment by closing access door. Listen for switch snap action. If no sound, adjust mounting bracket. 3. Replace if faulty.
	Timer module is faulty.	Replace timer module.
	CURE switch is faulty.	Check continuity of switch. Replace CURE switch if faulty.
Turntable does not rotate.	TABLE switch is faulty.	Check continuity of switch. Replace TABLE switch if faulty.
	Turntable motor is faulty.	Replace motor.
Lamp does not turn off.	TIMER switch assembly is faulty.	Check resistance of timer switch. Measure across two terminals, #4 and #5. 100K Ohm at full counterclockwise position and 1 megohm ±10% at full clockwise position. Replace if faulty.
	Timer module is faulty.	Replace timer module.

***NOTE: Take corrective actions only if you are experienced with electrical components and their repair.**

Call the DENTSPLY Trubyte Professional Services Department if you have questions. **Call DENTSPLY Trubyte before you ship the unit back:** 1-800-877-0020, ext. 4319 or 4581.

TRIAD® 2000 PARTS LISTING

PART DESCRIPTION	ITEM #
Collar Lamp	60815
Door Assembly	70170
Fan	60693
Feet	17249
Protective Lens	62023
Circuit Breaker	70200
Knob (Lift)	70201
Dial (Timer)	70197
Tungsten Halogen Lamp	70353
Motor, Turntable	6069201
Transformer (Export Models Only)	70251
Screw, Knurled Thumb	6105101
Socket Lamp	70245
Switch, POWER	70199
Switch, Interlock	61882
Switch, TABLE	7020201
Switch, CURE	7020202
Timer Module (Export Model 7021201 only)	70195
Timer Assembly, Switch	6390174
Turntable Assembly	60973
Power Cord (115V Domestic Only)	70237
Timer Module	70426

TRIAD® 2000 POWER SCHEMATIC

115V 50/60 Hz

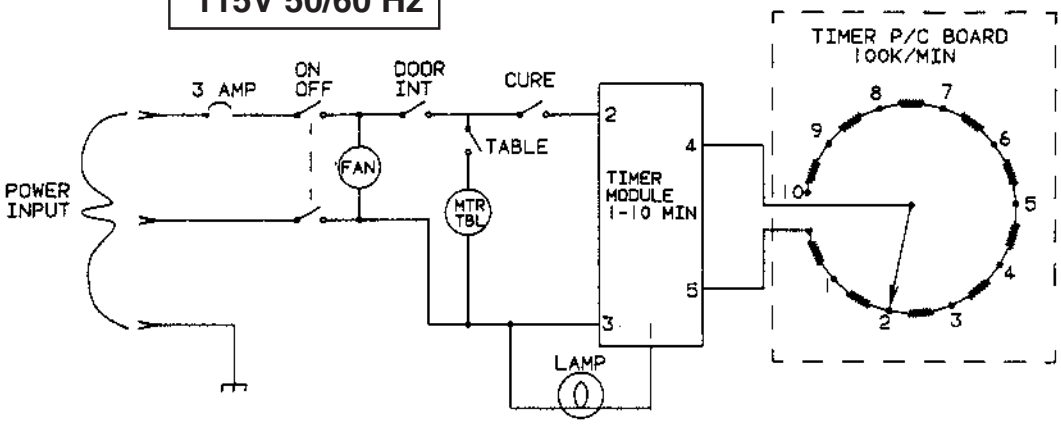

EXPORT MODELS

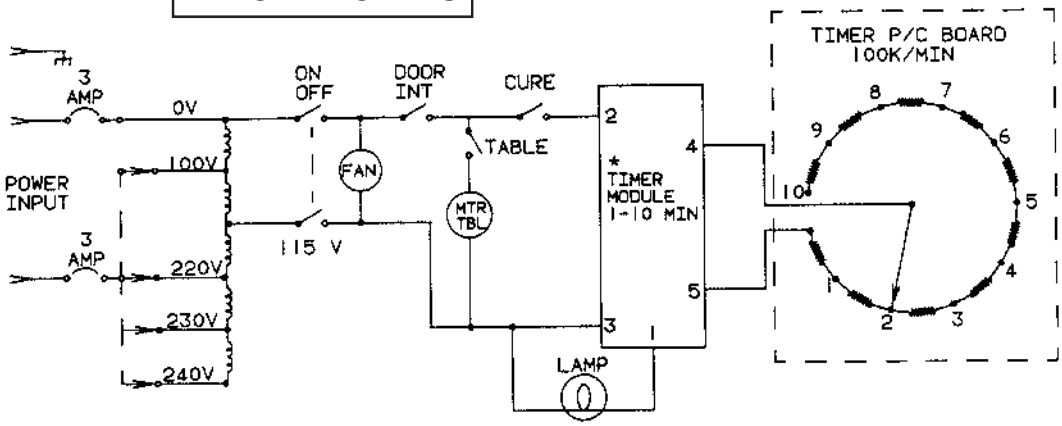

NOTE:

TRANSFORMER POWER INPUT WILL BE CONNECTED TO ACCOMMODATE REQUIRED VOLTAGE.

*P/N 7021201 TIMER IS 2-20 MINUTES

TRIAD® 2000 CURING UNIT WARRANTY

The DENTSPLY TRIAD® 2000 VLC Light Curing Unit is designed for dental use only and this warranty is not applicable to other uses. The DENTSPLY TRIAD 2000 VLC Light Curing Unit, except lamp, is warranted against defective material and workmanship for a period of 60 months from the date of purchase. Parts will be repaired or replaced at our option. The DENTSPLY TRIAD VLC Light Curing Unit lamp is warranted for 30 days. This warranty extends only to the original purchaser and is subject to the following conditions:

1. The warranty registration card must be completed and returned to DENTSPLY within two weeks of date of installation.

2. Any servicing of the DENTSPLY TRIAD 2000 VLC Light Curing Unit must be performed by trained DENTSPLY Trubyte Dealer Service personnel, or by DENTSPLY.

3. The DENTSPLY TRIAD 2000 VLC Light Curing Unit must not be subjected to abuse, improper installation, or application.

4. Damage due to improper return packaging will not be covered.

THERE ARE NO WARRANTIES, EXPRESS OR IMPLIED, WHICH EXTEND BEYOND THE DESCRIPTION ON THE FACE HEREOF. DENTSPLY neither assumes, nor authorizes any person to assume for it, any other liability in connection with the sale and use of the DENTSPLY TRIAD 2000 VLC Light Curing Unit.

DAMAGES ARE LIMITED STRICTLY TO REPLACEMENT OF THE DENTSPLY TRIAD VLC LIGHT CURING UNIT. DENTSPLY EXPRESSLY DISCLAIMS LIABILITY FOR INCIDENTAL AND CONSEQUENTIAL DAMAGES RESULTING FROM THE USE OF THE DENTSPLY TRIAD 2000 VLC LIGHT CURING UNIT.

Claims covered by this warranty will be honored when presented through your DENTSPLY Trubyte Dealer within one month from the discovery of the defect. For more information, call 1-800-877-0020, ext. 4319 or 4581.

APPENDIX I: TRIAD II OPERATION

TRIAD II owners should follow operating procedures and material curing times given for the TRIAD 2000 unit, and use the following sightline instructions specific to the TRIAD II Curing Unit.

USING THE TRIAD II 'SIGHTLINE'

To insure optimum processing cycles in the TRIAD II Unit, the turntable should be positioned to align the lowest point of the TRIAD VLC Material being used to 1/4'' below the metal-tab, white sightlines located on either side of the turntable.

Use the height adjustment control knobs on either side of the TRIAD II Curing Unit to align material within the chamber. See the following illustration.

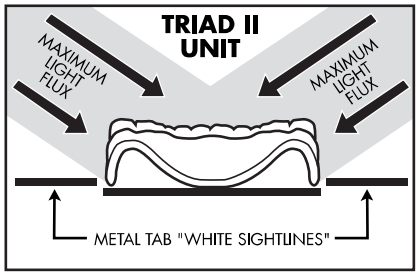

TRIAD APPLICATIONS / MATERIAL PROCESSING TIMES

APPLICATION	MATERIAL	APPROXIMATE FABRICATION	LIGHT CURE TIME	KEY FEATURES & BENEFITS
Custom Trays (Fully Edentulous)	Regular Blue Custom Tray Sheets *6-, 30-, 150-sheet pkgs.*	10 min.	8 min.	• Accurate, stable trays in about 10 minutes. • No mixing, no Methyl Methacrylate monomer.
	Translucent TruTray™ Custom Tray Sheets *4-, 30-, 100-sheet pkgs.*	10 min.	4 min.	
Stabilized Baseplates	Denture Base Material *6-, 30-, 150-sheet pkgs. & 6-pk. ropes light, regular, and dark unfibered*	15 min.	3 min. minimum	• Fast, accurate baseplates without mixing, waiting, or additional vacuum forming equipment.
Denture Relines (Direct & Indirect)	DuaLine™ Dual-Cure Reline Material *Intro & Refill Kits*	15 min.	5 min.* after self-cure	• Accuracy of self-cure set in mouth, strength and stability of light cure finish. Preferred delivery method, dual paste system.
	Hi-Flow Reline Material *6-, 30-sheet pkgs. & 6-pk. ropes – light and reg. pink*	30-60 min.	10 min.*	• Heat-processed quality relines in one appointment (less than 1 hour; time may vary depending on clinical situation). Patient leaves with relined denture. • No odor or exotherm.
	Regular Reline Material *6-, 30-sheet pkgs. & 6-pk. ropes – light and reg. pink*			
Resilient Denture Relines (Extended Term)	Resiline™ Resilient Reline Material *Intro & Refill Kits*	25 min.	1 - 2 min.*	• Extended term (1 year plus) resilient relines at chairside.
Denture Repairs	Denture Base Material *6-, 30-sheet pkgs. & 6-pk. ropes light, regular, and dark unfibered*	**Denture Base:** 25 min.	10 min.*	• Strong, fast repairs in minutes – without hassles. • No heat processing or packing.
		Denture Teeth: 15 min.	10 min.*	
Provisionals (Using a clear matrix)	Provisional Material *6-pk. ropes: extra-light, light, medium, medium yellow, dark, dark brown, enamel* *30-pk. ropes: all shades except enamel* *7-rope assortment pk.: 1 rope ea. shade plus enamel*	**Indirect:** 5 min./unit	10 min.	• Low shrinkage, no exotherm. Long-term wearability in a convenient procedure. • Correlation to 17 Bioform shades.
		Direct: 5-10 min./unit	10 min.	
Ortho Appliances	Triad Gel *4-tube pk. – colorless, pink, red, blue* *4-pk. assortment: 1 tube each shade*	12 min. with pre-bent wires	7 min.	• Fast, complete wire coverage. • Clear, see-through • Exact adaptation to tissue.
	Triad TranSheet™ Material *4-, 24-, 50-sheet pkgs. – colorless, pink*	**Hawley Retainer:** 10 min. with pre-bend wires	7 min.	• Non-slumping, easy adaptation. • Strong, accurate, translucent appliance. • Minimal finishing.
		Bruxism Splint: 25 min.	8 min.	
Implant Appliances (Placement Stents & Radiographic Verif. Trays)	Triad TranSheet™ Material *4-, 24-, 50-sheet pkgs. – colorless, pink*	18 min.	8 min.	• No 'salt & pepper' build-up. • No packing or heat processing.
Partial Dentures (Bi-Lateral Free End Saddle)	Denture Base Material *6-, 30-, 150-sheet pkgs. & 6-pk. ropes light, regular, and dark unfibered*	45 min.	8 – 10 min.	• Strong, accurate acrylic saddles in minutes without flasking. • Eliminates remakes due to framework distortion.

*Plus set and cure of Bonding Agent.

NOTE: 1) Cure times apply to Triad II and TRIAD 2000 models.
2) TRIAD materials cannot be overcured, with the exception of Resiline resilient reline material.

DENTSPLY
TRUBYTE

Manufactured by:
DENTSPLY International Inc.
York, PA 17405-0872
1-800-786-0085

EU Representative:
DeguDent GmbH
Postfach 1364 • 63403 Hanau
GERMANY
Telefon +49/6181/5950

www.trubyte.dentsply.com or www.dentsply.com

Printed in U.S.A. Form No. 4098-A 9/03 90119 Rev. H